ACCURL FIBER LASER CUTTING MACHINE

SMART SERIES

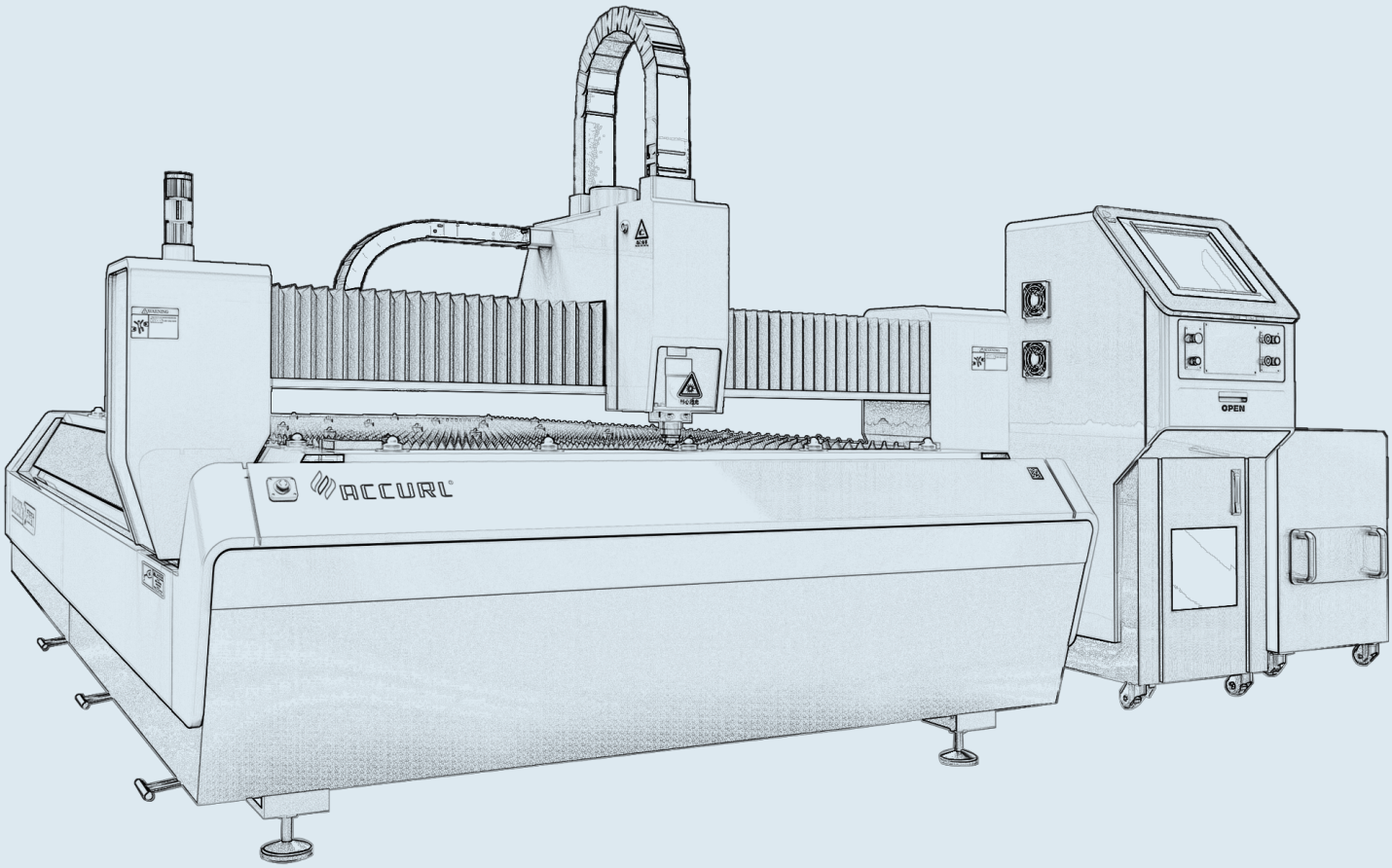

ACCURL®

Shaping your future

ACCURL FIBER LASER CUTTING MACHINE SMART SERIES

Our ACCURL team now introduces its newest generation in tube and profile processing technology – the fiber laser tube cutting system. Technological innovation has brought us the Smart KJG Series. With exceptional reliability and high beam quality, our fiber laser cutting machines continue to be leaders amongst the competition.

STANDARD COMPONENTS

- lUser friendly Cypcut Windows CAD/CAM CNC control unit.
- lUnique features:
- Very easy to operate.
- Quick and easy installation.
- Low investment and operating costs.
- The most cost-efficient solution for every requirement.
- Flexible beam path
- High output power
- High optical quality
- Up to %300 faster cutting
- High wall plug efficiency (>%30)
- Copper, brass cutting ability
- Advanced Raytools cutting head (with air cross blast).
- High performance and high accuracy rack and pinion system.

OPTIONAL EQUIPMENT

- FAGOR 8055 CNC System(Servo motor)
- Shuttle Table and Clean Room
- Table size 1500x4000mm
- Table size 2000x4000mm
- Pipe cutting system(φ220mm / 3000mm)
- Cutting Head from PRECITEC- Manual(500w-1500w)
- USA.IPG / nLIGHT / China.Raycus Fiber Laser Power(500w-2kw)

MACHINE BODY

Accurl laser cutting machine body using steel box welding process, twice annealing and on the large gantry CNC lathe processing

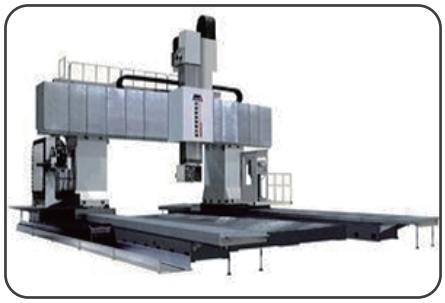

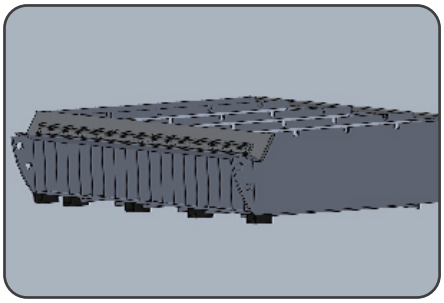

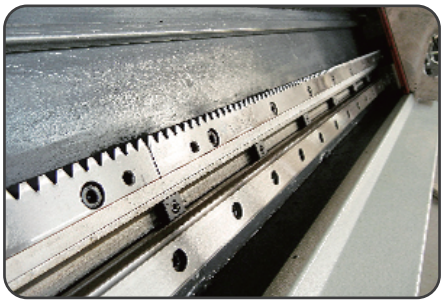

LINEAR GUIDE AND RACK

ACCURL laser cutting machine gantry structure under the dual drive, linear guide and rack pair inclined installation, the stress state is more reasonable, the movement is more stable

CAST AIUMINUM BEAM

The cast aluminum beam, Accurl laser cutting machine with light weight, good dynamic response, faster acceleration, better comprehensive cutting effect.

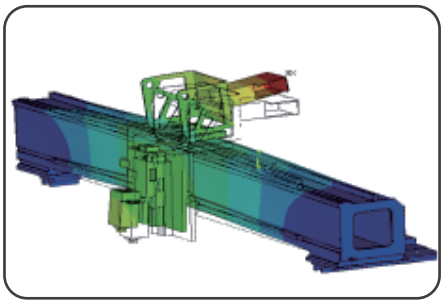

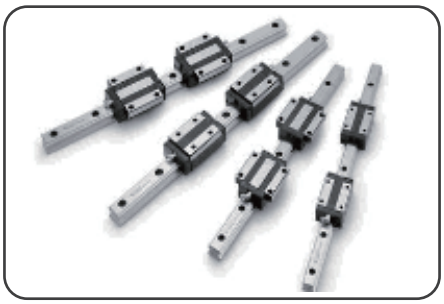

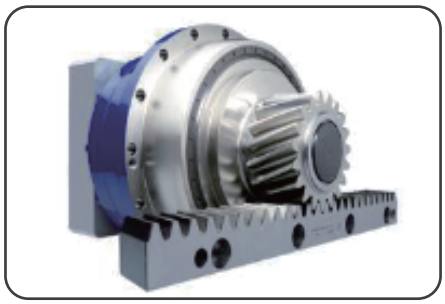

SHIMPO REDUCER

Accurl laser cutting machine adopts international first-class brand transmission components, THK linear guide, YYC grinding gear rack, SHIMPO flange output precision reducer, ensure the high precision of the machine tool.

NESTING SOFTWARE

With the professional automatic typesetting software, the cutting plate availability increase 1%-5%,cutting productivity10%-30%,significantly improve the cut quality, process data management, data collection and statistics and other data management functions, visualization integrated interface, simple operation ,easy to learn.

OPTIONAL FIBER LASER POWER

USA.IPG Fiber Laser Power

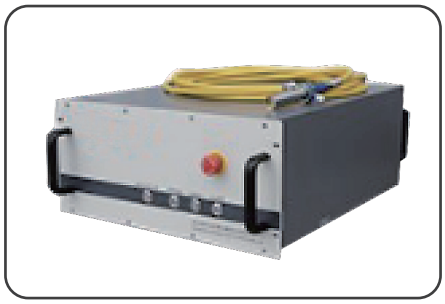

China.Raycus Fiber Laser Power

USA.nLIGHT Fiber Laser Power

MATERIAL CAPACITIES

Generator model		500W	700W	1000W	2000W	3000W
Nominal power	kW	0.5	0.7	1	2	3
Power requirement	kW	4	6	7	8	12
Wavelength	nm	1074	1074	1074	1074	1074
Cutting capacity						
Carbon steel	mm	6	8	10	16	20
Stainless steel	mm	2.5	3	4	8	10
Aluminum Alloys	mm	2	2.5	3	6	8
Brass	mm	1	2	2	3	4

SPECIFCATIONS

Type		KJG 1530	KJG 1540	KJG 2040
Max Cutting Size (mm)		3000×1500	4000×1500	4000×2000
Max Height of The Workpiece (mm)		90	90	90
Effective Travel	X Axis (mm)	3050	4050	4050
	Y Axis (mm)	1550	1550	2050
	Z Axis (mm)	100	100	100
Positional Accuracy	X Axis (mm)	±0.04	±0.05	±0.05
	Y Axis (mm)	±0.04	±0.05	±0.05
	Z Axis (mm)	±0.01	±0.01	±0.01
Repeated Positioning Accuracy	X Axis (mm)	±0.03	±0.03	±0.03
	Y Axis (mm)	±0.03	±0.03	±0.03
	Z Axis (mm)	±0.005	±0.005	±0.005
Repid Positioning Speed	X Axis (m/min)	80	80	80
	Y Axis (m/min)	80	80	80
	Z Axis (m/min)	30	30	30
Accelerated Sppeed (G)		1		
The Laser Power(W)		500/700/1000/1500/2000W		
Power Consumption of The Machine Tool(Kwh)		4.85	4.85	6.3
Level of Protection		IP54		
Total Weight(T)		4.35	5.45	6.25
Boundary DimensionL×W×H(mm)		4191×2520×1326	5390×2520×1326	5391×3105×1326

SINCE 1988

Sheet metal working machines

ACCURL®

This catalog is not a contractual document and only for illustrative purposes.
ACCURL reserves the right to modify any speci cations within this catalog without prior notice.

ACCURL.BLUELIN E.E/11.2017